TECHNICAL NOTE

ADJUSTING THE ROLLER BASES A-861 & A-866 FOR HARWOOD THICKNESS

The P250A and Q550 pneumatic flooring tools integrate a cam-based mechanism to allow a perfect adjustment to the flooring. Those tools can be fitted with the roller base A-861 or A-866 respectively. It remains necessary to adjust the tool to fit the flooring prior any installation.

Step 1: adjusting the back rollers for flooring thickness:

Using the 3/16" wrench, unfasten but do not remove screws (A), on each side.

Put the tool upside down and position a short piece of flooring against the gate/foot assembly.

Engage the 3/16" wrench in knob (B) as shown; rotate to move the base up or down. Note that the rotation range is only about 1/2 turn, do not apply unnecessary force when a limit is reached.

Adjust the height of the base to obtain a small gap between the gate/foot assembly and the top side of the tongue of the sample board. A gap of 1/32", about half the thickness of the nail, should be adequate for most situations.

Tighten both screws (A).

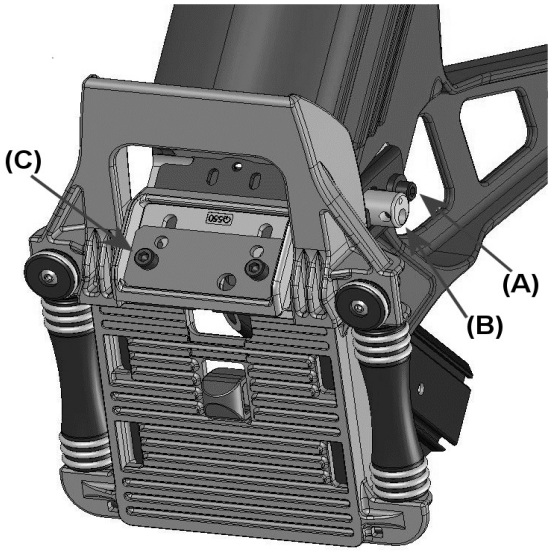

Step 2: adjusting the resting block for the width of the tongue:

The front rollers are always in contact with the front edge of the board. It is necessary to adjust the resting block to maintain a small gap between it and the tongue of the board.

Using the 3/16" wrench, unfasten by about 1/2 turn — do not remove the two screws (C).

With the short piece of flooring still against the gate/foot assembly, adjust the gap between the resting block and the tongue. A small gap of 1/32", about half the thickness of the nail, should be adequate for most situations.

Tighten both screws (C).
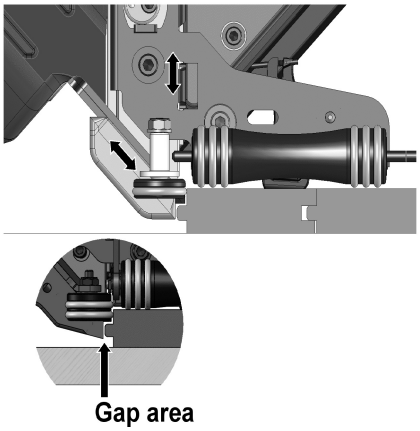
After completing the adjustment procedure, proceed with the installation of few boards. Carefully check for the proper positioning of the nail onto the board. Check after few more rows to insure that all parts are secured in place.